Parts List			
ITEM	QTY	PART NUMBER	DESCRIPTION
1	1	TP9688A	
5	1	TP9818F-rev-B	
6	1	TP9688E	
7	1	TP9688J	
11	2	M4X20-STUD	
14	1	TP14467O	
17	2	TP9688U	
21	1	TP9688B	
22	1	TP15122C	
23	1	TP9818D-rev-B	
24	4	M5X2-MINARB-SS	
27	2	TP15953j	
28	1	TP9688N	
30	2	TP15953P	
31	2	M5X10-STUD	
32	1	TP15953Q	
33	1	TP15710	
34	1	TP15953N	
35	1	TP16102I	

REVISION HISTORY				
ZONE	REV	DESCRIPTION	DATE	APPROVED
	B	FLATTER DESIGN	2017-09-06	js

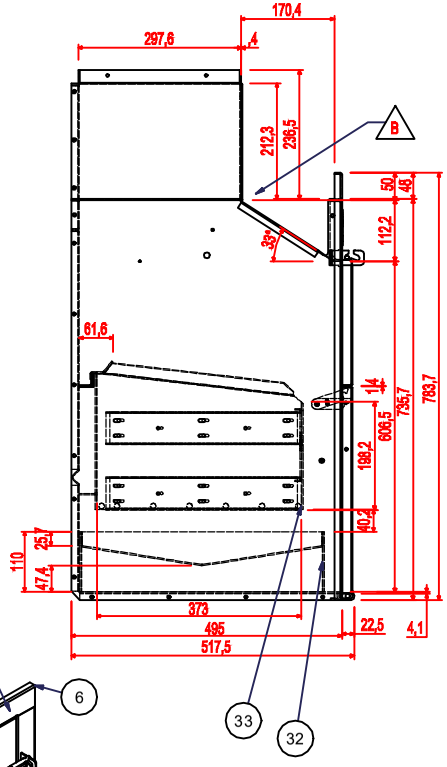

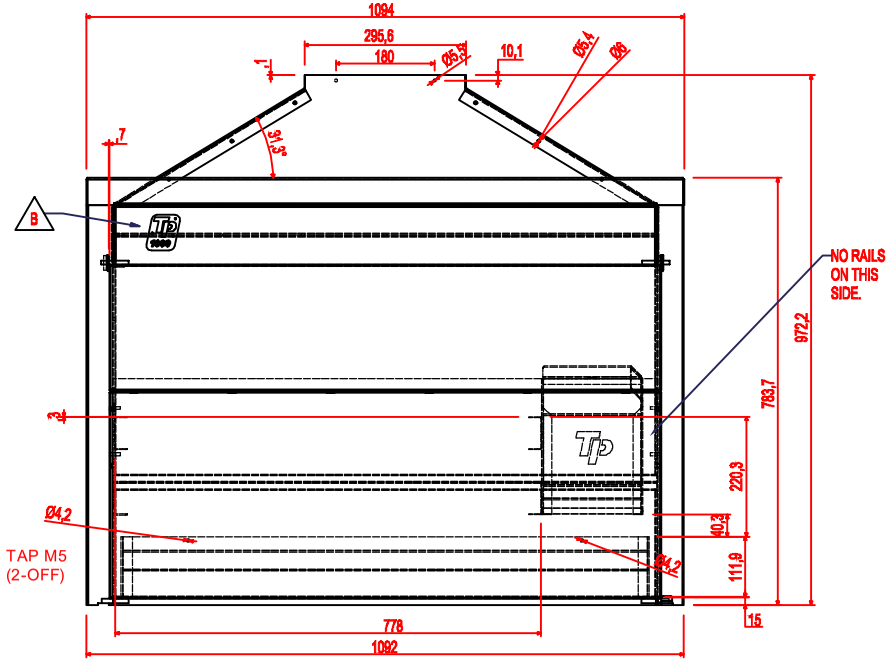

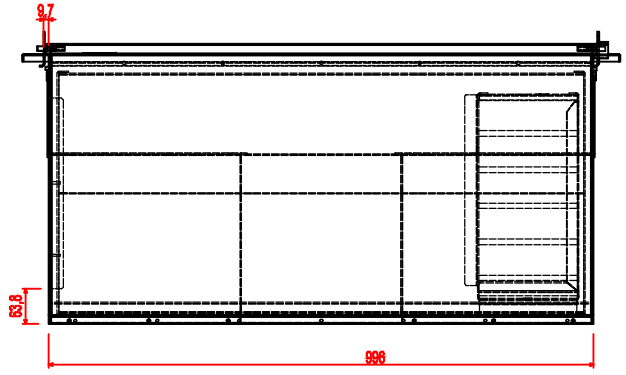

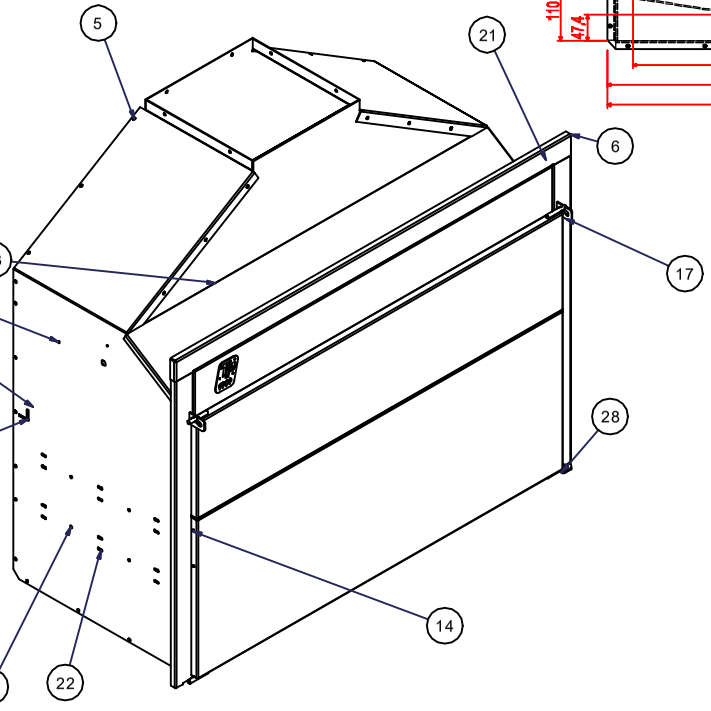

Z:\TP-PRODUCTS\001-BIB-BUILT IN BRAAIS\1000 BIB\TP15553-BIB 1000, BLACK 2.0mm\TP15553.dwg

Y:\TP-PRODUCTS\001-BIB-BUILT IN BRAAIS\TP16102-BIB-1000-430-SMALL BOX\TP16102.idw

CLIENT: TPP	REV: B	PROJECT	
ORDER No:	TOLERANCE	APPROVALS / DATE	
REFERENCE: 15953	HOLES ± 0.1mm	DRAWN Johan Steyn / 13/12/2016	TITLE BIB 1000 - 2mm SMALL BOX, 300x300 flue.
CLIENT DWG:	1 BEND ± 0.2mm	APPROVED	FINISH BLACK
OPERATIONS:	BEND TO BEND ± 0.3mm	ORDER DATE 2017-02-08	MATERIAL 2.0mm MS
1.) PUNCH	ANGLES ± 0.5°	SHEET 1 OF 1	Dwg. No: TP15553
2.) DEBURR	(BS 308 PT3)	SCALE	QTY: 2
3.) BEND			
4.) WELD			
5.) CLEAN			
6.)			
7.)			